RJ REYNOLDS

TOBACCO COMPANY

COPY

S. R. MacLEOD
Region Operations Mgr

150 Lawrence Bell Drive
Suite #108
Williamsville, NY 14221
(716) 634-9232
Fax (716) 634-3145

December 23, 1996

RJR Account #088080
Mr. D. Calderon
J. A. CALDERON CO.

FEBRUARY DORAL B2G1F / PROMOTION #700046

Dear Dave:

DORAL B1G1F product, and Live product, has been ordered (see quantities listed below), as well as 75 skus of B2G1F sleeves (Item #520844) to pack and ship this promotion to your participating retail accounts. All additional pertinent promotional information is listed below:

DORAL STYLE	B1G1F UPC Code	#/ (6M) Cases B1G1F	LIVE UPC Code	#/ (12M) Cases LIVE
Light Kg	12300-23880	5	12300-15112	1
Full Flavor 100	12300-23882	5	12300-15312	1

Product / Premium Arrival: January 20, 1997

Ship Date to Retail: Week of: January 27, 1997

SKU CUBE : 1.3600
SKU WT (w/o Product): 4.0000 lbs
Retail Sales Offer per Sku: 20 units

Billing per Sku: 4 Savings Cartons

EFT $ Amount: $1,499.37
Non-EFT $ Amount: $N/A

51862 3233

Source: https://www.industrydocuments.ucsf.edu/docs/lqym0000

Promotion Description: Utilize self-contained shipper. Shipper has 20 buy-2-get-1 free sleeves. Buy-1-Get-1-Free product should be placed into the sleeve and an additional 'Live' pack inserted with it. B1G1F product will be pre-banded.

SHIP NUMBER OF DISPLAYS TO EACH RETAIL ACCOUNT AS INDICATED ON THE ATTACHED CUSTOMER LIST

SEE ENCLOSED 'WHOLESALER PACKING INSTRUCTIONS'

A list of accounts authorized to receive packed displays is attached. RJR will reimburse you $28.00 per **live 12M** case for all displays packed and shipped to retail on a timely basis. This equates to **$126.00 (4.5 (12M) case(s) @ $28.00)**. Payment will be made as soon as possible once verification is received that all displays have been shipped to retail.

As always, thanks for your assistance in the marketing of our products.

Sincerely,

Judy

J. Campbell
Promotional Coordinator / 1610
/jc
cc: A. Zecca

Note to RJR Manager:
Upon verification of shipment to retail, notify Judy (#1610) for payment distribution to account.

V-FEBDOR.DOC

51862 3234

Source: https://www.industrydocuments.ucsf.edu/docs/lqym0000

WHOLESALER PACKING INSTRUCTIONS

VALUE ADDED PROMOTIONS - 1ST QTR.'97

February / March DORAL B2G1F (Buy 2 Packs Get 1 Pack Free)

STEPS

1. Open DORAL B2G1F shipping case.
2. Place 1 B1G1F offer into each DORAL sleeve (each case contains 20 sleeves).
3. Add 1 "live" DORAL pack of same brand style to each sleeve.
4. Fold display header card down.
5. Close the case.
6. Ship to retailer.

Each white carton contains 5 Pre-banded 2 Pack "Buy-One-Get-One-Free" DORAL Offers.

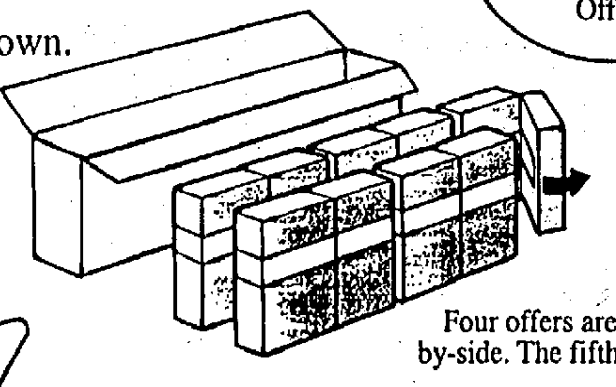

Four offers are banded side-by-side. The fifth offer folds out.

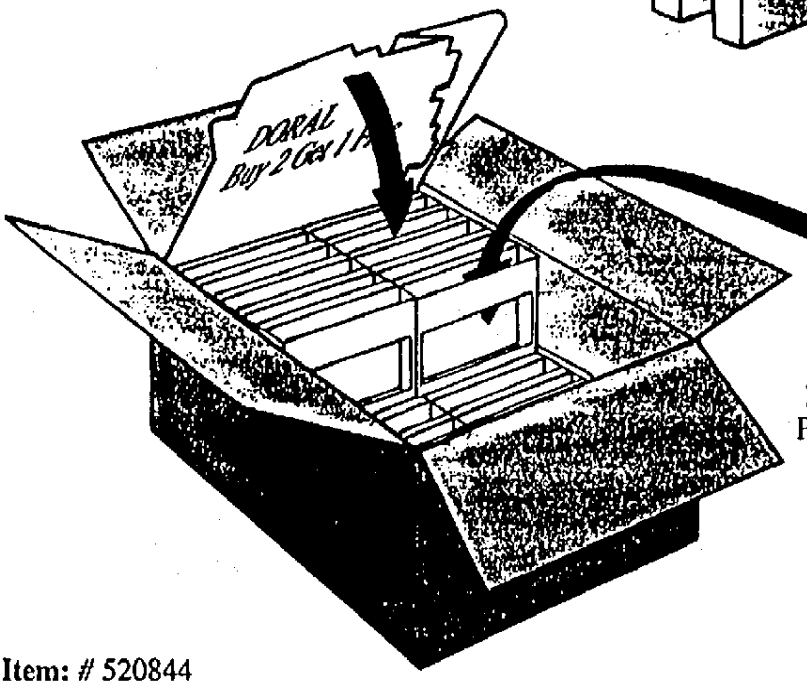

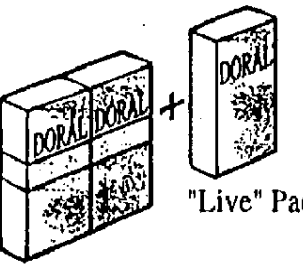

"Live" Pack

DORAL B1G1F
Pre-Banded Offer

Item: # 520844
Description: DORAL B2G1F Sleeve Kit

Brand Style	ff 100 B1G1f	Lt Kg B1G1f	X	ff 100 Live	LT Kg. Live	
Number of Cartons	2	2	X	1	1	

51862 3235

Source: https://www.industrydocuments.ucsf.edu/docs/lqym0000

WHOLESALER : 088080 J. A. CALDERON CO., INC. <DIRECT>
TEMPLATE : 700046 70200 DOR PEB B2G1F
TEMPLATE SEQ : 0002
SALES LEVEL : 16XXXX

TERR	RETAIL	ACCT	NAME	ADDRESS	CITY	ST	ZIP	QTY	TAX	CHAIN-ID	SUPPLIER	ACCT PHONE #
162604	162620	587842	7-11 #21337	1809 PENFIELD RD	PENFIELD	NY	14526	1		0001-0402		(716)381-7955
162603		673072	KWIK STOP	50 S MAIN STREET	PERRY	NY	14530	1				
162602	162630	679258	TUBBY'S DELIRAUNT	1097 LONG POND RD	ROCHESTER	NY	14626	1				(716)227-0120
162605	162232	724735	J&S DISCOUNT STORE	118 EXCHANGE ST	GENEVA	NY	14456	1				(315)789-0680
162604	162630	763221	7-11 21412	3345 LAKE AVE	ROCHESTER	NY	14612	1		0001-0402		(716)663-8173
162605	162232	763306	WOLCOTT BARGINE CTN	10 NEW HARTFORD S	WOLCOTT	NY	14590	1				(315)594-2517
162603		764560	G C MURPHY #3829	48 MAIN STREET	LE ROY	NY	14482	1		0318-0000		(716)768-8710
162604	162631	763651	7-11 24058	464 THURSTON RD	ROCHESTER	NY	14619	1		0001-0402		(716)235-3029
162602	162630	600125	TWENTY-TWENTY MARKE	2020 RIDGE RD W	ROCHESTER	NY	14626	1				(716)225-7480
162604		624695	RABEEH'S MINI MARKE	954 JAY STREET	ROCHESTER	NY	14608	1				(716)436-0543
162602	162631	654775	7-11 #11278	720 ELMGROVE ROAD	GATES	NY	14606	1		0001-0402		(716)426-1140
162604	162631	268721	NICKS SUPER STORE	460 MONROE AVE	ROCHESTER	NY	14607	1				(716)271-1390
162604	162631	268724	BI-RITE MKT	3289 E RIVER RD	ROCHESTER	NY	14623	1				(716)328-8770
162604	162630	481368	EL'S DELIC	1548 DEWEY AVE	ROCHESTER	NY	14615	1				(716)254-4910
162604	162620	763722	CFM #33-054	1430 CLINTON AVE	ROCHESTER	NY	14621	1		0990-0000		(716)266-5284
162605	162620	679346	DOLLAR&MORE STORE	6144 STATE ROUTE	WILLIAMSON	NY	14589	5				(315)589-3093
162602	162631	684550	RITESIDE MINI MKT	2709 CHILI AVE	ROCHESTER	NY	14624	1				(716)426-2151
162603	162627	430853	RETSOF SHUR SAVE	2727 GENESEE ST.	RETSOF	NY	14539	1				(716)243-2426
162604		705968	295 STONEWOOD INC	STONEWOOD DELI	ROCHESTER	NY	14616	1				(716)663-8110
162604	162620	716294	FT UNITED MARKET	645 CULVER RD	ROCHESTER	NY	14609	1				(716)482-7547
162604	162620	730966	TRANSIT FOOD MKT	1674 NORTON ST	ROCHESTER	NY	14609	1				(716)342-6630
162604	162631	339359	METRO CENTER MINI	583 W BROAD ST	ROCHESTER	NY	14608	1				(716)328-1411
162604	162631	269157	WORLD WIDE NEWS	100 SAINT PAUL ST	ROCHESTER	NY	14604	1				(716)546-7140
162604	162630	657232	MATHIAS PATRAWALA I	1475 W RIDGE ROAD	ROCHESTER	NY	14615	1		0362-0102		(716)663-3059
162604	162630	268755	M&T GROCERIES	1070 STONE RD	ROCHESTER	NY	14616	1				(716)663-4232
162604	162631	510617	HIGHLAND MINI MARKE	834 SOUTH AVE	ROCHESTER	NY	14620	1				(716)461-4497
162605	162620	578794	DOLLAR&MORE STORE	MAIN STREET	SODUS	NY	14551	5				(315)483-0943
162605	162232	602879	DOLLAR & MORE STORE	DBA DOLLAR & MORE	LYONS	NY	14489	5				(315)946-9601
162604	162624	633313	M&S PARTNERS INC.	DBA A PLUS	EAST ROCHESTER	NY	14445	1		0362-0102		(716)381-5764
162602	162631	268764	7-11 11277	1482 BUFFALO RD	ROCHESTER	NY	14624	1		0001-0402		(716)436-0481
162602	162631	326498	LYELL VIDEO CENTER	1366 LYELL AVE	ROCHESTER	NY	14606	1	NYS			(716)458-1770
162605	162620	763667	7-11 21962	1304 FAIRPORT RD	FAIRPORT	NY	14450	1	NYS	0001-0402		(716)586-7828
162604	162631	763477	7-11 22653/F	436 MONROE AVE	ROCHESTER	NY	14607	1	NYS	0001-0402		(716)244-4219
162605	162232	354171	CLYDE BARGIN CENTER	79 GLASGOW ST	CLYDE	NY	14433	1	NYS			(315)923-2031
162604	162631	415991	REFINERS	417 MONROE AVE	ROCHESTER	NY	14607	1	NYS			(716)244-6310
162604	162631	268713	7-11 24809	3995 W HENRIETTA	ROCHESTER	NY	14623	1	NYS	0001-0402		(716)359-3314
162604	162624	268720	7-11 #11279	3100 E HENRIETTA	HENRIETTA	NY	14467	1	NYS	0001-0402		(716)334-6632
162604	162631	416235	MIKE HAHER'S MOBIL	1810 MOUNT HOPE A	ROCHESTER	NY	14620	1	NYS		917872	(716)244-3318
162605	162620	503226	FAIRPORT MOBIL MART	110 S MAIN ST	FAIRPORT	NY	14450	1	NYS			(716)223-7645
162604	162630	764381	CFM #33-053/F	501 LONG POND RD	ROCHESTER	NY	14612	1	NYS	0990-0000		(716)227-2157
162604	162630	549096	STOP N SHOP MOBIL/F	2044 LATTA RD	ROCHESTER	NY	14612	1	NYS			(716)663-4353
162604	162620	505050	DON SCOTT AUTO MART	3290 ATLANTIC AVE	PENFIELD	NY	14526	1	NYS			(716)377-0631

5

51862 3236

Source: https://www.industrydocuments.ucsf.edu/docs/lqym0000

WHOLESALER : 088080 J. A. CALDERON CO., INC. <DIRECT>
TEMPLATE : 700046 70200 DOR FEB B2G1F
TEMPLATE SEQ : 0002
SALES LEVEL : 16XXXX

TERR	RETAIL	ACCT	NAME	ADDRESS	CITY	ST	ZIP	QTY	TAX	CHAIN-ID	SUPPLIER	ACCT PHONE #
162604	162631	268815	MAALI'S MARKET	587 MAPLE ST	ROCHESTER	NY	14611	1	NYS			(716)235-2269
162604	162620	559196	HENRY'S MINI MT.	519 MERCHANTS RD	ROCHESTER	NY	14609	1	NYS			(716)482-7920
162605		764125	BECKER PHARMACY	MAIN ST	RED CREEK	NY	13143	1	NYS			(315)754-6351
162602	162630	764134	N SIDE SER CENTER	4118 LAKE RD N	BROCKPORT	NY	14420	1	NYS			(716)637-9893
162602	162631	268748	CFM #33-041/F	1726 LONG POND RD	ROCHESTER	NY	14606	2	NYS	0990-0000		(716)426-5140
162602	162630	539162	STOP-N-SHOP	692 MANITOU RD	HILTON	NY	14468	1	NYS			(716)392-5080
162602	162630	268798	BOBS GROCERY	1722 LAKE RD	HAMLIN	NY	14464	2	NYS			(716)964-2430
162602	162631	764179	CFM #33-048	4179 BUFFALO RD	ROCHESTER	NY	14624	1	NYS	0990-0000		(716)594-2850

PAGE BREAK TOTAL ACCOUNTS 50 TOTAL QUANTITY 64

TEMPLATE TOTAL ACCOUNTS 50 TOTAL QUANTITY 64

51862 3237

Source: https://www.industrydocuments.ucsf.edu/docs/lqym0000

GHCP18RN1610XX TEMPORARY PAYMENT DETAIL REPORT 01/29/97

ACCOUNT NUMBER: 088080
VOUCHER NUMBER: 15341693
DATE WRITTEN: 01/29/97
STATUS: PAID
AMOUNT PAID: 126.00

J. A. CALDERON CO.
1467 MAIN ST E
ROCHESTER , NY 14609

SEND CHECK TO: ROU

DESCRIPTION	UNITS	AMOUNT
DISPLAY ASSEMBLY	4.50	126.00

EXPLANATION: DOR B2G1F 700046 / AZ

51862 3238

Source: https://www.industrydocuments.ucsf.edu/docs/lqym0000